Annals of Warsaw University of Life Sciences - SGGW
Forestry and Wood Technology № 84, 2013: 60-65
(Ann. WULS - SGGW, For. and Wood Technol. 84, 2013)

Verify the accuracy of estimation the model between dimensional characteristics of branch scar and the location of the knot in the beech trunk

VLADIMÍR RAČKO
Department of Wood Sciences and Technology, Technical University in Zvolen, Slovak Republic

Abstract: *Verify the accuracy of estimation the model between dimensional characteristics of branch scar and the location of the knot in the beech trunk*. The study analyzes the accuracy of estimated the dependencies between external and internal characteristics of beech trunk. On the basis of measurements and the derived literature formulas we can estimate quite accurately the size and position of the knot in the trunk. From the perspective of practice, it can contribute to a better qualitative evaluation of produced logs and lumber.

Keywords: Beech, trunk, branch scar, seal, knot angle

INTRODUCTION

Effectiveness evaluation of wood raw material largely depends on the quality of information about the occurrence and location of wood defects in logs. Quality assessment in practice is often inaccurate, dependent on subjective human factor. Over the past 20 years to extend the automated systems working on the principle of Computer tomography (CT) (Bhandarkar et al. 2002, Longuetaud et al. 2012), which are capable of high-precision locate and determine the type and dimensions of the defects in logs. However, these systems are very expensive and therefore not applicable in the conditions of small and medium-sized mills. Recently, with the development of scanning techniques and techniques of image analysis starting to promote the issue of automated assessment of the location and size of internal log defects on the basis of their surface characteristics of the bark (Thomas et al. 2007, Thomas and Thomas 2010). However, the accuracy of the estimate the size and location of the defects, in compared to the CT system is lower. On the other hand, the greatest advantage is their significantly lower price.

The pioneering work of the examination the relationship between the external scars on bark and internal localization of defects can be considered as work (Shigo and Larson 1969, Schulz 1961) on beech, (Rast et al. 1989) on oak, (Rast et al. 1991) on maple, (Rast et al. 1991) on poplar. At present, the research deals the issue of determining the accuracy and estimate of wood defects on the larger statistical datasets on white oak, red oak and yellow poplar (Thomas 2012, Thomas 2009) and on European beech (Stängle et al. 2012).

The aim of the article was to verify the accuracy of an estimation the relationship between dimensional characteristics of branch scar and the location of the overgrown knot in the beech trunk, according to the sampled data and geometric dependences reported in literature (Schulz 1961).

MATERIAL AND METHODS

Sample material was taken from 15 beech trees (average age of 105 years) of forest the University Forest Enterprise, Technical University in Zvolen. The samples were taken from the lower and the central part of the stem on each tree. The file contained a samples, size of 25 - 50 cm (diameter) and 20-50 cm (length). There were measured dimension characteristics of

branch scars (ls =/seal length; ws =/seal width and lm =/moustache length.) on the bark (fig.1). Subsequently, the samples were cut through the pit by radial direction. On the radial surface were measured the knot parameters determinate its location and degree of overgrow in the trunk (β = knot angle; rk =/knot radius; Δr = knot to bark distance and ro =/observed trunk radius) (fig. 1).

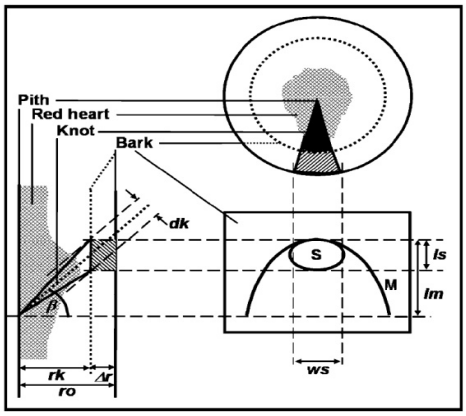

The equations with parameters according to (Schulz 1961):

$$\Delta r = ro \cdot \left(1 - \frac{ls}{ws}\right) \qquad (1)$$

$$\beta = \frac{\arctan\left(lm - \frac{1}{2} \cdot ls\right)}{rk} \qquad (2.1)$$

$$\beta = \arctan\left[\left(\frac{lm}{ls} - \frac{1}{2}\right) \cdot \frac{ws}{ro}\right] \qquad (2.2)$$

Fig. 1 Geometric relationships between branch scar (S =/seal; M =/moustache). Figure according to (Wernsdörfer et al. 2005); slightly modified.

Further, there were calculated descriptive statistical characteristics of each variable. Finally, there were made linear regression and correlation analysis of calculated dependent and independent variables.

RESULTS AND DISCUSSION

Descriptive statistical characteristics of the measured values the dependent and independent variables for the correlation and regression analysis are given in table 1. The results showed, that the dimensional characteristics of the branch seal are a relatively accurate indicator of the size and position of overgrown knot inside the trunk (fig. 2). Especially, the increasing linear regression relationship between the branch seal quotient *(ls/ws)* and knotty length quotient *(rk/ro)* provides a quite accurate estimation (fig. 2a). The similar results for beech reported the authors (Stängle et al. 2012) (y=0,862.x+0,175; R^2 = 0,6271).

Tab. 1 Descriptive statistical characteristics of dependent and independent variables

	ro cm	rk cm	□r cm	rk/ro ratio	lm cm	ls cm	ls /lm ratio	ws cm	ls/ws ratio	□ o
N	30	30	30	30	30	30	30	30	30	30
Mean	17,1	7,7	9,3	0,5	9,7	3,9	0,5	8,5	0,5	42,7
Min	12,7	3,1	0,0	0,2	1,7	0,8	0,2	4,8	0,1	24,9
Max	25,4	16,1	15	1,0	21	8,3	0,8	17	1,3	61,3
Std. Dev.	2,5	3,8	4,0	0,2	5,6	1,9	0,1	2,9	0,3	10,0
Std. error	0,45	0,69	0,72	0,04	1,01	0,36	0,03	0,53	0,05	1,83

Similarly, we can determine also relationships between branch seal quotient *(ls/ws)* and a size of sound wood above knot *(Δr)*, expressed by knot to bark distance quotient *($\Delta r/r_0$)* (Fig. 2b). Theory of estimation is based on the assumption that after dead of branches and its overgrow in the trunk, branch seal width increases by the age. On the other hand, the size of branch seal length remains constant (Fig. 3).

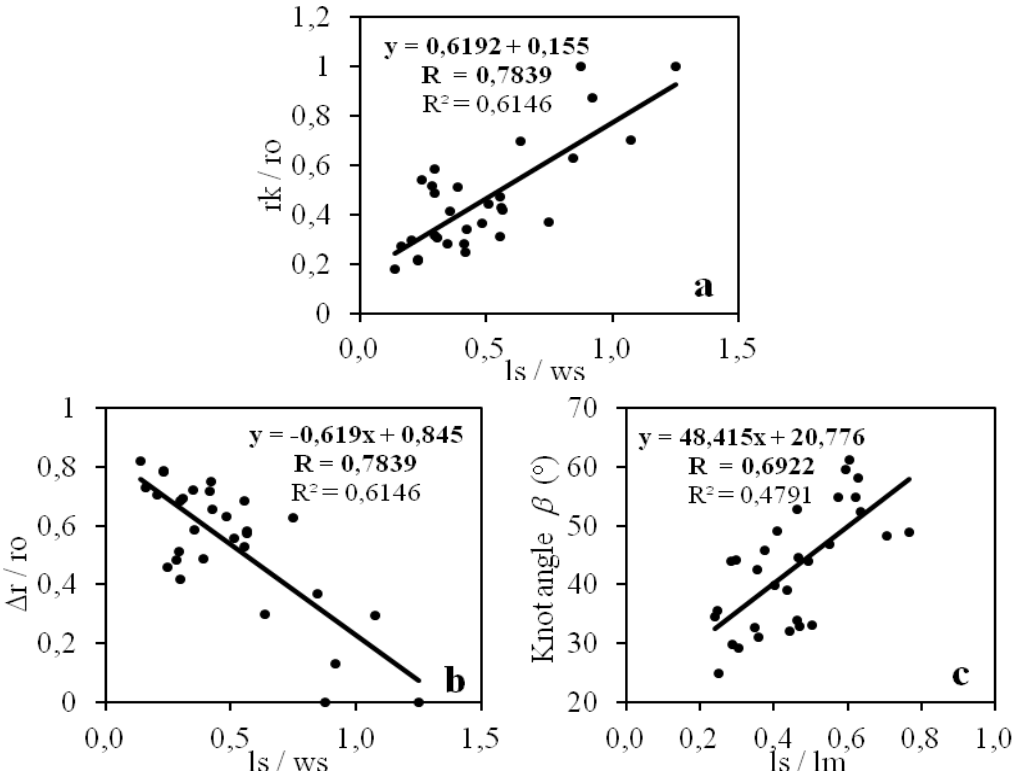

Fig. 2 Linear regression and correlation relationships between external and internal characteristics of knots in the trunk. (a) – relationship between seal quotient *(ls/ws)* on bark and knotty length quotient *(rk/ro)* in trunk, (b) – relationship between moustache-seal length quotient *(ls/lm)* on bark and knot angle in the trunk.

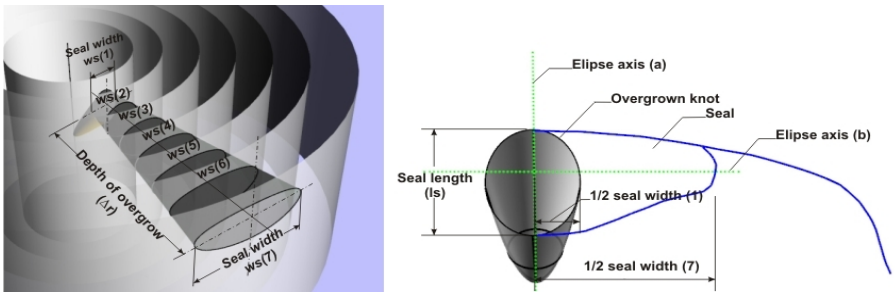

Fig. 3. Model showing the increase of seal width *(ws)*, depending on the knot depth of overgrow (□r)

Based on the seal-length mustache quotient *(ls/ lm)* is possible to estimate also quite accurately the knot angle *(β)* (fig. 2c). However, the accuracy of the estimation is a little bit of lower than in previous cases. The research literature does not provide the comparison the accuracy estimation the knot angle in beech. On the other hand, in the species red oak, yellow-poplar (Thomas 2009) and white oak (Thomas 2012) were found lower determination coefficients (R^2 = 0.42, R^2 = 0.31 and R^2 = 0.35)

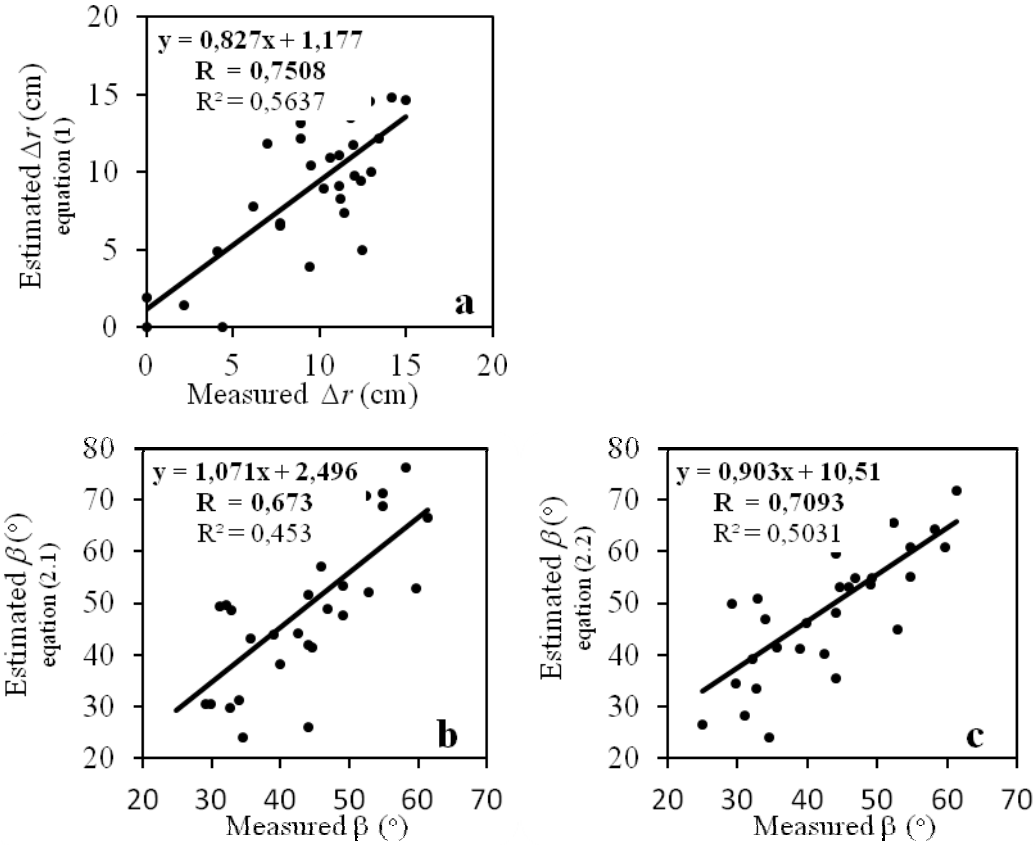

Fig. 4. Linear regression and correlation relationships of estimated and measured parameters. (a) – depth of knot overgrow *(Δr)*, (b) a (c) – knot angle *(β)*

Furthermore, based on the measured and the calculated data according to equations reported in literature (Schulz 1961) was verified the accuracy of estimation the size of sound wood above knot *(Δ r)* and knot angle *(β)*. We can say that the accuracy of correlation coefficients the sampled parameters is comparable to the results obtained above (fig. 2 and fig. 4).

It should be said that the accuracy of the estimation also reduce the other important parameters, such as: pith eccentricity, bending of knots, annual growth ring increments etc. If we could determine these parameters (based on external characteristics), the accuracy estimation of the knot size and position in the trunk would be significantly higher.

CONCLUSION

From the obtained results, it is clear that between dimensional characteristics of branch scar (*ls/ws* and *ls/lm*) on the bark and the location of the knot in the beech trunk (*rk/ro,* $\Delta r/r_0$ and *β*) were found a linear regression relationships width relatively high statistically significant correlation coefficients.

Furthermore, we found that between measured and calculated characteristics (according to the relationships described in the literature) of the position of knot (*β* and *Δr*) also exist linear regression relationships, with comparatively high correlation coefficients.

REFERENCES

1. BHANDARKAR S. M., FAUST T. D., TANG M. 2002: Design and prototype development of a computer vision-based lumber production planning system. Image and Vision Computing, 2002, 20 (3): 167-189.
2. LONGUETAUD F., MOTHE F., KERAUTRET B., KRÄHENBÜHL A., HORY L., LEBAN J. M. DEBLED-RENNESSON I. 2012: Automatic knot detection and

measurements from X-ray CT images of wood: A review and validation of an improved algorithm on softwood samples. Computers and Electronics in Agriculture, 2012, 85(7): 77-89.
3. RAST E. D., BEATON J. A., SONDERMAN D. L. 1989: Photographic guide of selected external defect indicators and associated internal defects in White Oak. RP-NE-628. USDA Forest Service Northeastern Forest Experiment Station, Broomall, USA, pp. 24
4. RAST E. D., BEATON J. A., SONDERMAN D. L. 1991: Photographic guide of selected external defect indicators and associated internal defects in Sugar Maple. RPNE-647. USDA Forest Service Northeastern Forest Experiment Station, Radnor, USA, pp. 29
5. RAST E. D., BEATON J. A., SONDERMAN D. L. 1991: Photographic guide of selected external defect indicators and associated internal defects in Yellow-poplar. RP-NE-646. USDA Forest Service Northeastern Forest Experiment Station, Radnor, USA, pp. 35
6. SHIGO A. L., LARSON E. H. 1969: A Photo guide of the pattern discolouration and decay in living northern hardwoods trees. USDA RP-NE-127, 1969.
7. SCHULZ H. 1961: Die Beurteilung der Qualitätsentwicklung junger Bäume. Forstarchiv, 1961, 3289–99.
8. STÄNGLE S. M., BRÜCHERT F., SAUTER U. H. 2012: Quality assessment of logs using CT-scanning technology In Hardwood Science and Technology - The 5th Conference on Hardwood Research and Utilisation in Europe 2012, 10-11 September 2012, Sopron, Hungary: University of West Hungary Press, 2012, p. 149-158.
9. THOMAS E. R. 2012: Predicting internal white oak (Quercus alba) log defect features using surface defect indicator measurements: . Forest Products Journal, 2012, 61(8): 656-663.
10. THOMAS L., SHAFFER C. A., MILI L., THOMAS R. E. 2007: Automated detection of severe surface defects on barked hardwood logs. Forest product journal, 2007, 57(4): 50-56.
11. THOMAS L., THOMAS E. R. 2010: A graphical automated detection system to locate hardwood log surface defects using high-resolution three-dimensional laser scan data. In 17th Central Hardwood Forest Conference GTR-NRS-P-78, April 5-7, 2010, Lexington, USA, 2010, p. 92-101.
12. THOMAS R. E. 2009: Modeling the relationships among internal defect features and external Appalachian hardwood log defect indicators. Silva Fennica, 2009, 43(3): 447-456.
13. WERNSDÖRFER H., CONSTANT T., MOTHE F., BADIA M. A., NEPVEU G., SEELING U. 2005: Detailed analysis of the geometric relationship between external traits and the shape of red heartwood in beech trees (Fagus sylvatica L.). Trees-Structure and Function, 2005, 19(4): 482-491.

Streszczenie: *Weryfikacja dokładności oceny położenia sęka w pniu na podstawie wymiarów blizny po gałęzi w kłodzie buka*. Praca dotyczy dokładności oceny zależności pomiędzy zewnętrznymi a wewnętrznymi własnościami kłody bukowej. Na podstawie pomiarów i zaczerpniętych z literatury zależności można dość dokładnie określić wymiar i położenie sęka w kłodzie. Z praktycznego punktu widzenia może to poprawić ocenę jakości kłody przy produkcji tarcicy.

Acknowledgement: *This paper was processed in the frame of the projects No. 1/0163/12 as the result of author's research at significant help of VEGA agency, Slovakia.*
This publication is the result of the project implementation: Extension of the centre of Excellence „Adaptive Forest Ecosystems", ITMS: 26220120049, supported by the Research & Development Operational Programme funded by the ERDF.

Corresponding author:

Vladimír Račko
Department of Wood Science,
Faculty of Wood Sciences and Technology,
Technical University in Zvolen,
T.G. Masaryka 24,
960 53 Zvolen,
Slovak Republic
e-mail: racko@tuzvo.sk