Modeling of spindle for turret of the specialized tool type SF16MF3

Oleg Krol, VitalyZhuravlev

Volodymyr Dahl East-Ukrainian National University,
Molodizhny bl., 20a, Lugansk, 91034, Ukraine, e-mail: krolos@yandex.ru

Received September 16.2013: accepted October 14.2013

S u m m a r y . The considered procedure of the making the models spindle's nodes in CAD KOMPAS and complex study tense-deformed conditions of the tools product in module APM FEM.
K e y w o r d s : the spindle, 3D-model, equivalent stress, moving the section.

INTRODUCTION

The variety of the problems, solved under design modern metal cutting tools, use the different mathematical methods and toolboxes solid and parametric modeling does the necessary choice of the efficient systems computer aided design and algorithm of searching for of the optimum decisions in problem of the designing formative spindle's nodes of tools.

PUBLICATION AND METHOD ANALYSIS

The solving standard of rating to capacity to work and efficiency created designs of the spindle is stiffness. The study to stiffness spindle's nodes with use the methods solid modeling is dedicated to work [9,14,16,17]. The hollow sliding spindle multi-objective tool is considered on the base of the models IS1250, produced Ivanov plant heavy tool building. For this spindle characteristic of reduction to stiffness of the springy system tool, which typical of technological operation boring hole by sliding spindle. The reduction to stiffness causes and reduction to accuracy, which, possible partly compensate the account to systematic inaccuracy numeric program management facility. The Authors of the work [14] consider the problem of the qualification to regularities of the change to stiffness sliding two support spindles depending on lengths of the flight, which is a base to further numeric correction to velocities moving of feed presenting formative node. As base software programs are used package solid modeling Solid Works and integrated system of the analysis and calculation of the physical processes Cosmos Works. As full supports spindle's nodes were used radial and thrust bearings V7036E. T,P4S.DUL (180×280×46) of the company FAG. As a result of study's authors [14] have got the mathematical description to dependencies to stiffnessspindle's node tool IS1250 from position spindle of boring and have developed the algorithms to correcting the value of the presenting, which provide increasing to accuracy bored hole numeric program management facility.

Together with that on stiffness spindle's node, but, consequently, and on accuracy of the processing significant influence render the features a bearing in support, which are not

presented in work [14]. So in mathematical model of stiffness and accuracy are used factors, reflecting type and design supports (including way of the creation preloading, its value and particularities of the mounting duplex support).

Alongside with criterion of stiffness in speediest spindle's head solving is a criterion vibration resistance and phenomena of the loss to stability. Such sort problem for rotating shaft, sending turning moment, is considered in work [1]. The Author values the moment of the loss to stability deformed and rotating shaft depending on axial power and turning moment. Using CAD SolidWorks Simulation [1-3, 22]. has allowed to get value of the critical load, give the estimation of conditional time, in which occurs sharp increase a moving the sections of the shaft and fix the respective interval of the angular velocities. Together with that influence of the features supports of shaft on behavior of the under investigation design in process loading is not considered. Scientist MGTU "STANKIN" and firm "ENIMS" is designed program complex SpinDyna (the version 2.3) [9], allowing modeling the designs an spindle's nodes on springy supports. In composition of the complex enter set of the modules: shaping to geometric model, tasks parameter of support and others modern interface is used in program in the manner of panels of the forms, at, the model of spindle's node includes the elements: span, joint, support and others. So element "Support" is intended for modeling bearing or their combination, but geometric sizes bearing and their stiffness are assigned manually or are chosen from database. Method initial parameter is used at building of the models dynamic of spindle in matrix production [17], founded on shaping the pass on matrixes separate area between initial and final elements. The particularity of this author's product is an account mechanism damping spindle in its support and joints with use stickiness and springy model on base of the analysis of the imaginary part to dynamic stiffness under investigation spindle's node. Together with that absence of the facilities solid modeling and toolbox of the method final element limits [13,15,24,25]. the area of the conducted studies. Appear and problems of the following join with the known integrated CAD in the course of decisions of the tasks design and technological preparation production.

OBJECTS AND PROBLEMS

The purpose given work is improvement process of modeling spindle's nodes metal cutting tool to account of the choice integrated toolbox CAD KOMPAS and APM WinMachine.

THE MAIN SECTION

As object of the designing is considered spindle's element for turret (revolver head) of specialized vertical milling-drill tool second standardsize models SF16MF3. The givenned tool is used in condition small series and production in batch series and is intended for multioperation processing product complex steel profile, cast iron, light and non-ferrous metals. On tool can be executed processing vertical, horizontal and inclined planes, shaped surfaces, hole, slot by different technological methods: milling, drilling, core-drilling and reaming [11]. The tool is the instrument equipped by device of the automatic change, which is realized by turn six-spindle revolver head (turret) in necessary position on program. Six-spindle revolver head presents itself cast-iron body, in radial bore which is fixing six-spindle of the elements. The choice of the instrument is realized by means of special cam, but rotate of the head is realized by means of rack gearing with use hydraulic motor [20, 21]. When working tool, moving part of revolver head is fixed by set of Belleville springs with constant effort 20580 N. For analysis of capacity to work design and choice optimum alternative design by author is created by 3D-model six-spindle revolver head (Fig.1) in CAD KOMPAS-3D [6-8, 12].

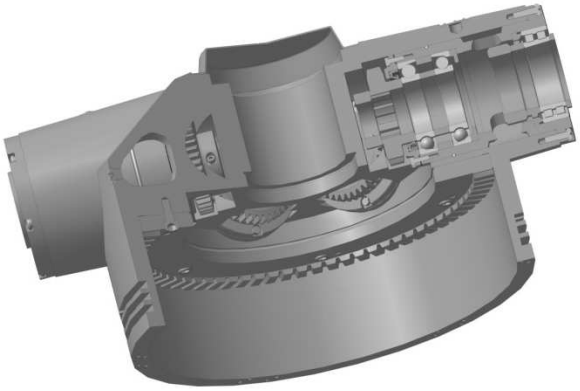

Fig. 1. 3D-model six-spindle revolver head

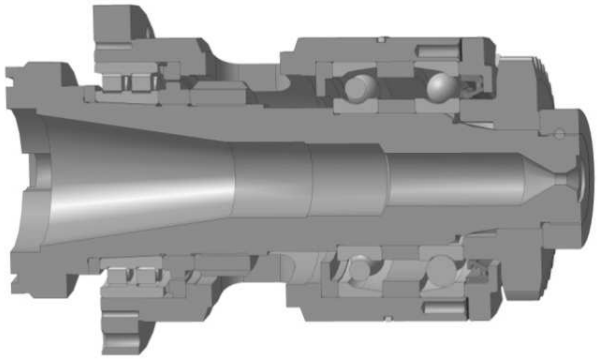

Fig. 2. 3D - model spindle's node tool SF16MF3

This system computer aided design, created by group of the companies ASKON, allows realizing technology collective end-to-end 3D-designing product different purpose. Whole spectrum of the necessary work can conduct with its help constructor from initial three-dimensional preparation of its ideas and detailed modeling of the final product before automatic creation of documentation and drawings. As from versions KOMPAS-3D V13 and above appears the possibility of the study stress-deformed conditions by means of integrated module APM FEM [18,19,23], as well as realize technological preparation production and preparation controlling programs for tool with NC.

The main formative spindle's element presents two-support design. In process of the study is built solid model spindle's element of the revolver head (Fig.2). In front support of the spindle is installed high accuracy radial and thrust double - rowroller bearing, which perceives radial and two-way axial loads and is characterized by possible radial load in 1,7 times above, than beside corresponding to single-in-line bearing [4, 5]. Except this, the support provides raised stiffness of design head. In back support are installed two-set radial and thrust bearing ball bearings, which perceive radial multifunction and double-sided axial loads that in turn allows to use them in moving support without fixing externally rings in axial direction. So their effectively use in elements with greater axial effort under for high frequency of the rotation.

At montage back support is chose X-arrange join radial-thrust ballbearing ("face" sides) with use preloading in the manner of distance sleeve to width miscellaneous. The regulation distance sleeve allows to reduce the surplus heating a support. Herewith follows to enlarge the width a distance sleeve between internal race of the bearing (change its) or reduce on value depth of grinding for width sleeve between externally race of bearing. In practice of tool building value depth of grinding depends on diameter hole of bearing. For internal diameter within the range of from 70 before 100 mm - a value depth of grindingis order 6 μm.

For building of design documentation spindle's node effectively to use the KOMPAS-Graphic - an universal system, which automatically generates the associative types of the three-dimensional models, which are associated with 3D - model spindle's node. At changes to models brings about change the graphic representation. The new possibilities are opened and for building of the constructive schemes spindle's nodes (Fig. 3), where spindle together with support create system a "spindle–supports". On base of the constructive schemes is formed several conclusion important with standpoint of the decision of the problems to stiffness and vibration two-support spindle's nodes on rolling bearing.

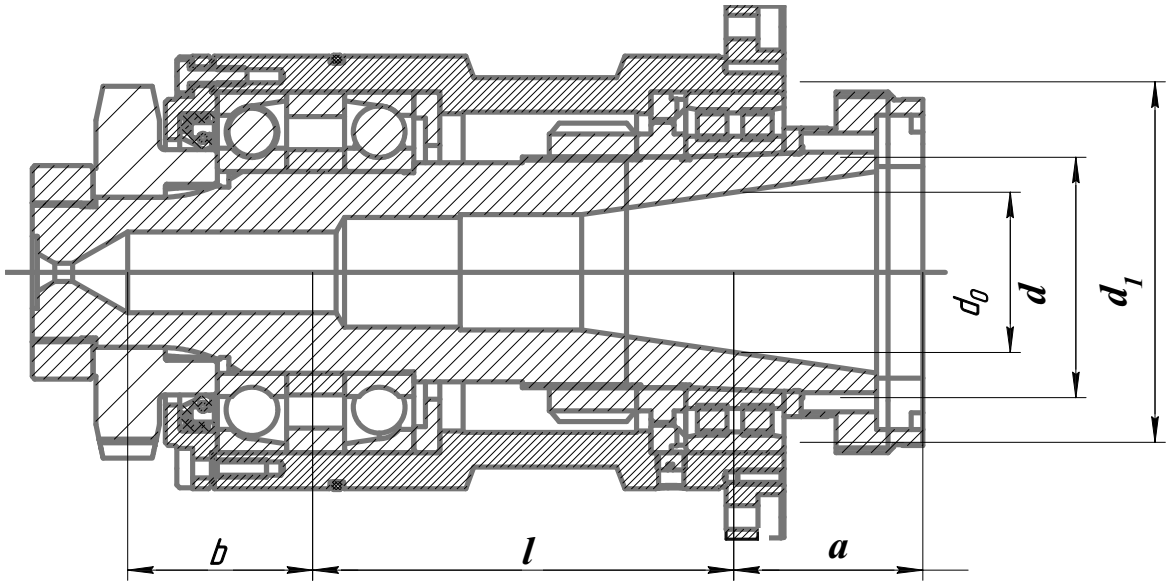

Fig. 3. Constructive scheme spindle's node

On the base constructive scheme (fig.3) is designed accounting scheme of the spindle as statically indeterminable beam, which is assembled on three supports (each bearing - a support), which possess linear and angular softness. The known more simple accounting scheme [2], in which two-set bearings on back support are changed by one support, and scheme becomes the two-support. Herewith ball bearings are considered as hinge springy support, factor to softness which is defined by amount contact deformation ball and race.

For calculation and designing the spindle of the free form under free nature loading and supporting is intended specialized module APM Shaft [23]. Specialized graphic facilities allow executing the procedure of preparing the initial data.

The module APM Shaft has specialized graphic editor for task of the geometries shaft and axles. The editor gives at the disposal of the user for facilities, providing:

- a task to designs of the shaft,
- an entering the loads, acting on shaft,
- a placement support, on which is mounted shaft.

When designing the shaft reasonable to use the main difference of the graphic editor APM Shaft from similar editor of the other systems, which consists in special set primitive, with which it handles. The Primitives APM Shaft - a main elements to designs of the shaft (cylindrical and cone-shaped area, chamfers, fillets, grooves, holes, area with thread, keys, spline), as well as loads, which can act on spindle.

Drawing the shaft included:

1. Draw cylindrical and cone-shaped area of the shaft.
2. Set the transition elements (chamfers, fillets, grooves).
3. Set the holes, area with thread, keys, spline of the join.
4. Enter attached to shaft of the load and place supports.

By means of editor APM Shaft possible to assign radial and axial concentrated power, distribution power, as well as moments of bending and torsions.

With use the toolbox of the module APM Shaft shall realize designing the spindle of the box of the velocities milling-drill-bore tool to models SF16MF3. The results of the calculation of the spindle in module APM Shaft systems "APM WinMachine" are submitted for Fig.4.

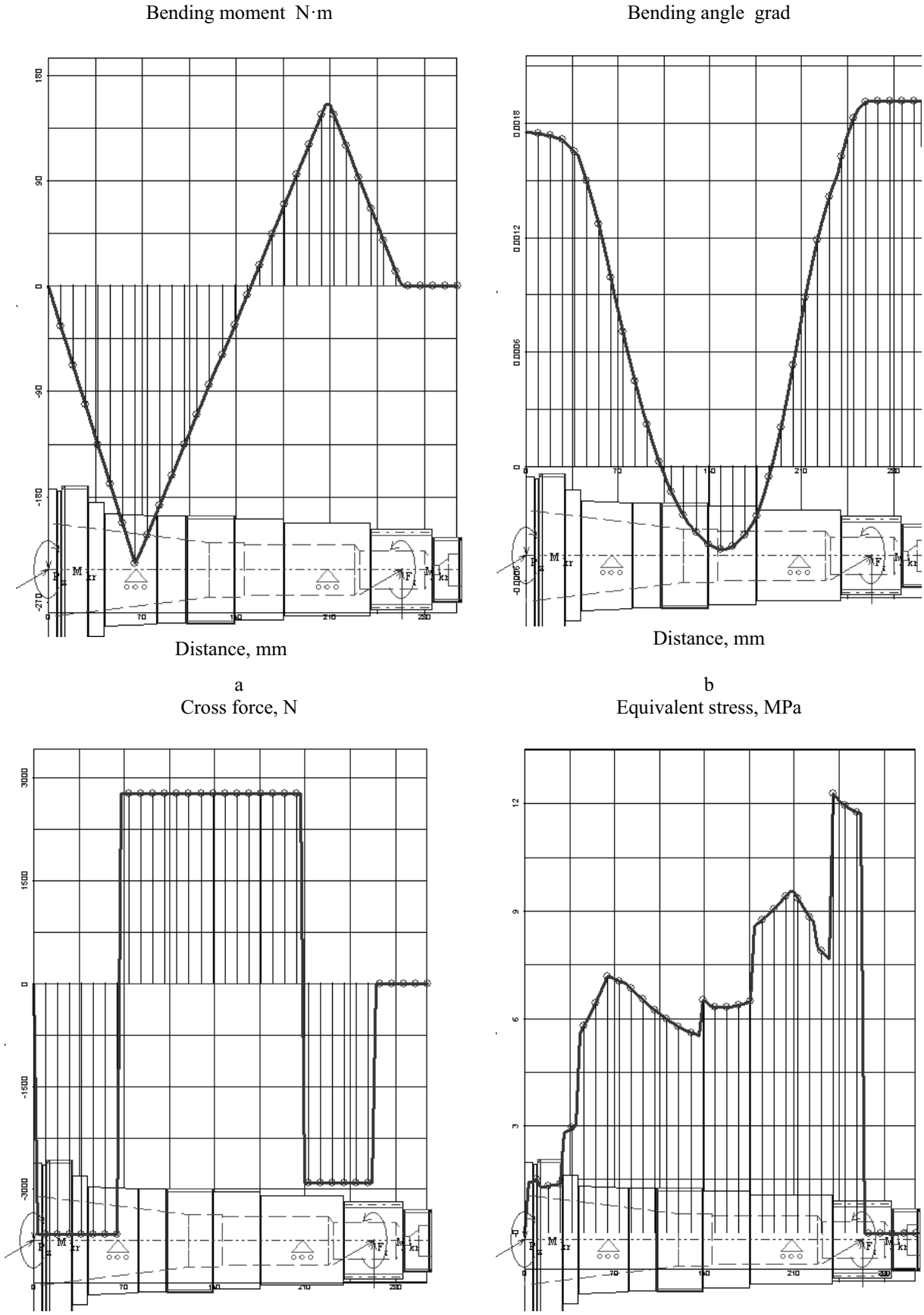

Fig. 4. Result of calculation for spindle in module APM Shaft: a – bending moment, b – bending angle, c – cross force, d –equivalent stress

When designing supports metal cutting tool on criteria of longevity is realized choice bearing from collection standard on dynamic load rating *C*. Specifics of the calculation bearing shaft and spindles tool consists in account of the additional load on bearing from preloading bearing and from functioning the node on raised frequency of the rotation. For majority bearing tool typical following conditions work: on spindle are found group driven gear and instrumental block. In current whole lifetime bearing of the spindle tool works under different velocity. Under each velocities of the spindle works one of the driven gear. Thereby, each of bearing of the spindle on different time lag work is found under the action of loads to variable value. The account variable mode is defined by value of the equivalent load under the most disadvantage from one of the driven gear and corresponding to condition of the cutting.

For two-set radial-stubborn bearing, installed on back support of the spindle of the revolver head in calculation is taken into account base static load rating C_0 equal duplicated value of static load rating of one bearing. In turn dynamic load rating C_r complete two-set (specially selected at the factory) radial-stubborn bearing on scheme X ("face-to-face arrangement") is taken as for one double-row bearing. Total dynamic load rating C_Σ the complete from two ball bearings take equal $1{,}62 \cdot C_r$.

The bearings assembled on face-to-face arrangement, can have different preloading, as well as variable angular contact. In change from back-to-back arrangement this scheme is characterized by limited possibility to sustain the overturning moments. Hereupon limited support surface shortens the stiffness of the system and possible breach alignment.

For estimation of serviceability spindle's supports we use the module APM Bear, which executes the complex analysis of rolling bearing, executing calculation of the main features supports and provides the choice to optimum design bearing nodes. The particularity of this module is a presentation of the bearing in nonideal variant with provision for inaccuracy of the machining roller and raceway of the bearing. Exactly such consideration for many tasks of contact stiffness and contact stress characteristic. In APM Bear is executed whole complex of the checking calculations, when its output features estimate on the known geometry of the bearing. Are they herewith used original analytical and the numerical approaches, as well as methods of mathematical modeling that enables to present the results of the calculation these parameter and values their statistical diffusing in suitable for user type - a tables, graph, histograms.

Complex calculation double-row roller bearing radial type 4 - 3182116 G0ST 7634-75, installed in front support of spindle is presented on fig.5.

For issue competitive tool it is not enough be limited by geometric modeling. Necessary undertaking the all-round engineering analysis of the designed object with use instrument CAE-analysis. To such toolbox appertain finite-element analysis APM FEM integrated with system of three-dimensional modeling KOMPAS-3D. APM FEM are a component part of united ambience of the designing and analysis with use the associative geometric model, united library material and the general with KOMPAS-3D interface To advantage of the module APM FEM pertains:

- an united interface, both for geometric, and for accounting model, which provides the simplicity and lightness of the work with library. All actions on creation 3D-models, preparation it to calculation and viewing result are realized in united window,
- a system FE-analysis works straight with geometric model (the kernel) KOMPAS-3D, and there is no need to in transmission of the files through outside formats that reduces probability an error,
- an acceptable price: APM FEM - an simple and inexpensive decision, which allows without acquisition "heavy" full functional CAE-systems to value strength an element to designs.

Moment of friction

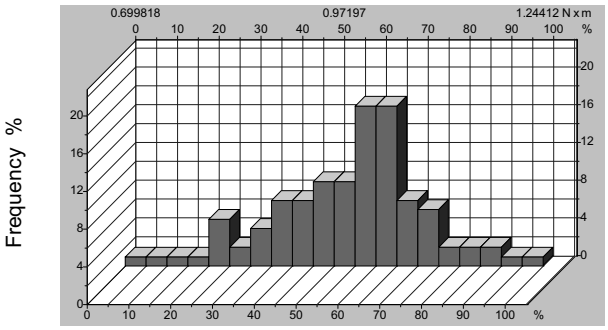

Loss of power

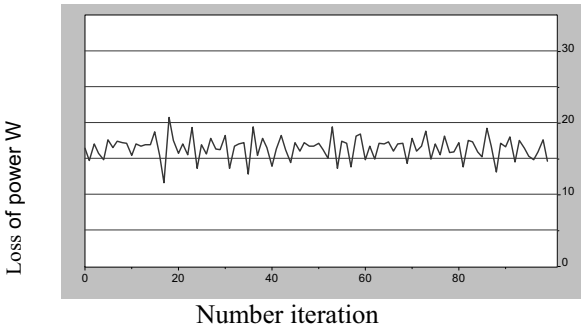

Histogram of radial run out
Amplitude and interval

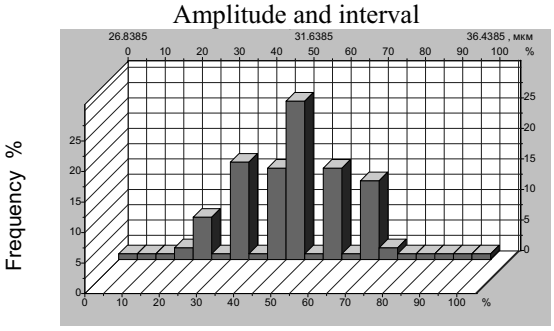

Histogram of side run out
Amplitude and interval

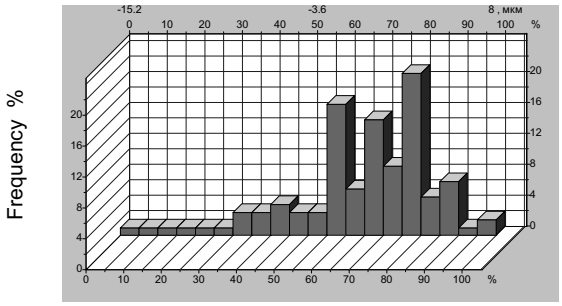

Field of run out
Side run out µm

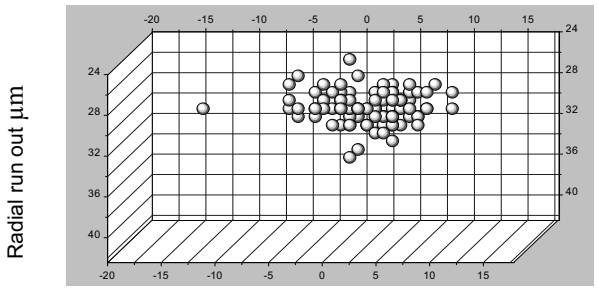

Resume

Mean longevity	**2511**	**hour**
Contact stress max	**1285**	**MPa**
Heat release	**59628**	**J/h**
Dynamic load rating	**127831**	**N**
Radial run out	**31.478**	**µm**
Side run out	**0.216**	**µm**
Moment of friction	**0.989**	**N × m**
Loss of power	**16.564**	**W**

Fig. 5. Result of calculation for support in module APM Bear

The procedures of the calculation in module APM FEM are built on the basis of the method final element so in accounting model can be taken into account practically all particularities design and conditions to their usages.

The conditions of the operation to designs are realized by means of different types of the loads and fastening: uniformly distribution pressure to surface of the three-dimensional model, uniformly distribution power on face or rib, given in projection X, Y, Z global coordinate system, the loads, acting on the whole design as a whole - linear and angular speedup, the loads in the manner of uniformly distribution temperature to rib, surfaces and element.

The generation FE-nets is realized in automatic mode with using such parameter, as maximum length sides element, maximum factor of the thickening on surfaces and factor rarefaction in volume (Fig. 6) At choice of the size tetrahedron follows to use the recommendation: maximum length sides element must be approximately in 2…4 times thicknesses of the most thin detail less in assembly.

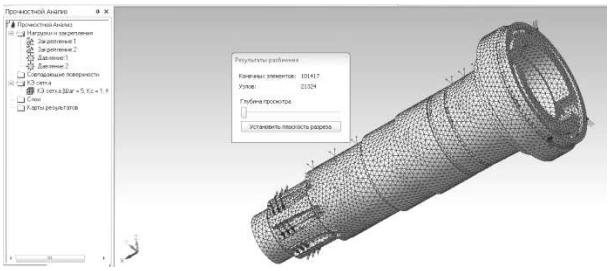

Fig. 6. Finite-element net in module APM FEM

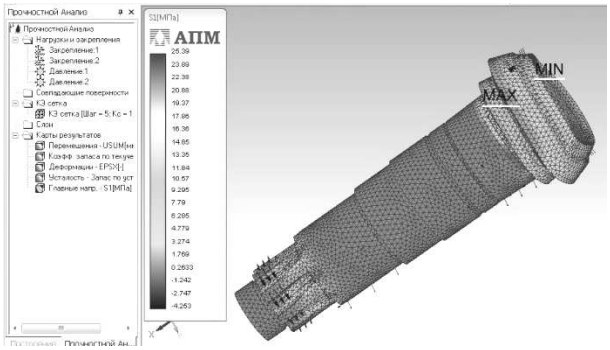

Fig. 7. Cards equivalent stresses

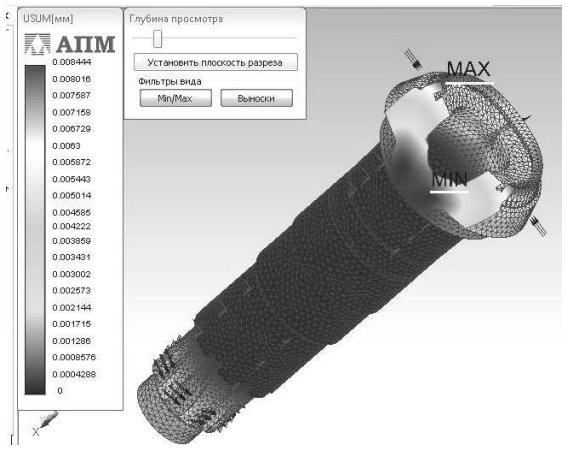

a

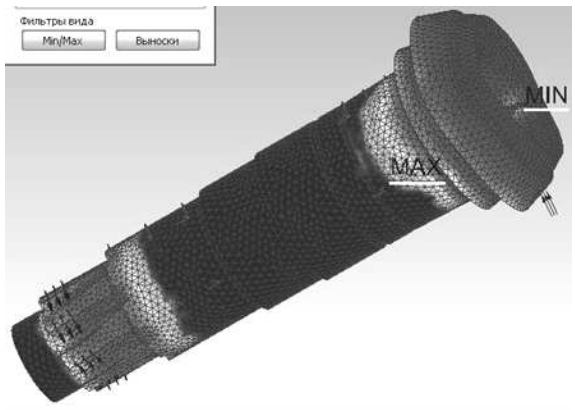

b

Fig. 8. Result finite-element account: a – card of displacement, b – card of deformation

As result of the calculation available cards stress (Fig.7), displacement (Fig.8), safety factor on different criteria of strength, the temperature, own frequencies and the forms of the fluctuations. The cards of the stresses allow most exactly analyzing functioning the node under the action of loads, revealing the concentrators of the stress, value stiffness to designs.

The associative relationship is provided between geometric and accounting model. When contributing the changes to geometric model, the editing the fastening or loads it is enough whole only execute reconstructing the net and repeat the calculation. More possibilities opened parametric modeling work peace and nodes of tool [10]

CONCLUSIONS

1. Complex research to designs spindle's node specialized vertical milling-drill tool second standardsize models SF16MF3 with0020use geometric modeling CAD KOMPAS and engineering analysis of the designed object with use instrument CAE-analysis are realize.

2. 3D-model of the spindle's node in system KOMPAS-3D, giving real belief about designs this main formative node of tool is built.

3. All-round analysis tense-deformed conditions of the spindle's tool in module APM FEM method final element is executed. The fields of the equivalent stress and displacement in different sections of the designed object is built.

REFERENCES

1. **Alyamovsky A.A., 2010.:** SolidWorks Simulation. What solve practice tasks Moscow: DMK Press. – 448. (in Russian).
2. **Alyamovsky A.A., 2011.:** Engineering calculation in SolidWorks Simulation. – Moscow: DMK Press. - 464. (in Russian).
3. **Alyamovsky A.A., Sobachkin A.A., Odintsov E.V., 2005.:** Computer modeling in engineering practice. – Sankt-Petersburg. – 800 (in Russian).
4. **Beizelman R.D., Tsipkin B.V., Perel L.Ya., 1975.:** Rolling bearing. Reference book. – Moscow: Machine building. – 572. (in Russian).
5. **Chernevsky L.V., Korostashevsky R.V., 1997.:** Rolling bearing: Reference book – catalogue. – Moscow: Machine building. – 896. (in Russian).
6. **Ganin N.B., 2011.:** Designing and calculation of strength in system KOMPAS-3D V13. – Moskow: DMK. – 320. (in Russian).
7. **Ganin N.B., 2012.:** Three-dimensional designing in KOMPAS-3D. – Moskow: DMK Press. – 776. (in Russian).
8. **Ganin N.B., 2008.:** Designing in system KOMPAS-3D. – Moskow: DMK Press. – 445. (in Russian).
9. **Khomyakov V. S., Kochinev N.A., Sabirov F. S., 2011.:** Modeling and experimental study dynamics spindle's node/ Procceding of Tula State University. The Technical sciences. – issue 3:251-258. (in Russian).
10. **Krol O.S., 2012.:** Parametric modeling machine tools and cutting toolls: monograph. – Lugansk:Volodymyr Dahl EUNU. – 116. (in Russian).
11. **Krol O.S., Khmelovsky G.L., 1991.:** Optimization and control process of metal cutting. – Kiev: UMK VO. – 140. (in Russian).
12. **Kudryavtsev E.M., 2011.:** Metal construction, gear box, electric motors in KOMPAS-3D. – Moskow: DMK Press. – 440. (in Russian).
13. **Kurkov S.V., 1991.:** Finite element method in tasks for dynamic of mechanisms and drives. - Sankt-Petersburg: POLITECHNIKA. – 224. (in Russian).
14. **Mineev A.S., Blinov A.V., 2012.:** Study to stiffness spindle's node by facility of solid modeling / Visnik IGEU. – issue 1.: 3-7. (in Russian).
15. **Myachenkov V.I., Maltsev V.P., Maiboroda V.P., 1989.:** Machine building calculation by finite element method. – Moscow: Machine building. – 520. (in Russian).
16. **Pronikov A.S., Borisov E. I., 1995.:** Designing machine tool and machine systems: Reference book-textbook. In 3-h part. Is. 2. P. 1. Calculation and Designing nodes and element tool. - Moskow, Machine buildingю – 371. (in Russian).
17. **Push A.V., 1992.:** Spindle's nodes. Quality and reliability. – Moskow, Machine building. – 288 (in Russian).
18. **Shelofast V.V., 2004.:** Bases of the designing machine. – Moskow: APM. – 472. (in Russian).
19. **Shelofast V.V., Chugunova T.B., 2004.:** The Bases of the designing the machines. Examples of the decision task. – Moskow: APM. – 240. (in Russian).
20. **Sokolov V., Azarenko N., Sokolova Ya., 2012.:** Simulation of the power unit of the automatic electrohydraulic drive with volume regulation // TEKA Commisionof Motorization and Energetic in Agriculture. –Vol.12. – № 4.– Lublin, Poland: 268-273.
21. **SokolovaYa., Tavanuk T., Greshnoy D., Sokolov V., 2011.:** Linear modeling of the electrohydraulic watching drive // TEKA Kom. Mot.I Energ.Roln. – OL PAN, XIB, Lublin, Poland: 167-176.
22. **Tiku Sh., 2004.:** Effective work: SolidWorks. – Sankt-Petersburg: PITER. – 768 (in Russian).
23. **Zamriy A.A., 2008.:** Practical scholastic course CAD/CAE systems APM WinMachine. – Moskow: APM. – 144. (in Russian).
24. **Zenkevich O., 1975.:**Finite element method in techniques. – Moscow: Mir. – 541. (in Russian).
25. **Zenkevich O., Cheung Y., 1974.:**Finite element method in theory of construction and mechanics of continuous medium. - Moscow: NEDRA. – 240. (in Russian).

МОДЕЛИРОВАНИЕ ШПИНДЕЛЯ РЕВОЛЬВЕРНОЙ ГОЛОВКИ СПЕЦИАЛИЗИРОВАННОГО СТАНКА МОДЕЛИ СФ16МФ3

Олег Кроль, Виталий Журавлев

Аннотация. Рассмотрена процедура создания модели шпиндельного узла в САПР КОМПАС и процедура проведения комплексного исследования напряженно-деформированного состояния проектируемого изделия в модуле APM FEM.

Ключевые слова: шпиндель, 3D-модель, эквивалентные напряжения, перемещение сечений